REV	DESCRIPTION	DATE	ECN NO.	CHANGER
A-0	NEW RELEASE	14.03.20		zengbo
A-1	UPDATE DRAWING	14.04.16	140416083	zengbo

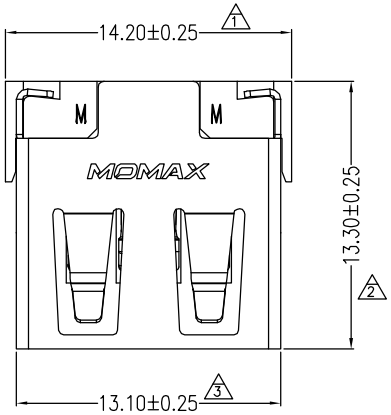

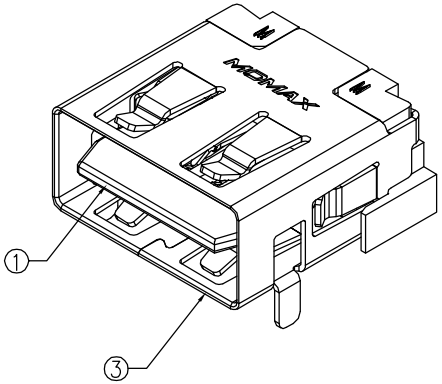

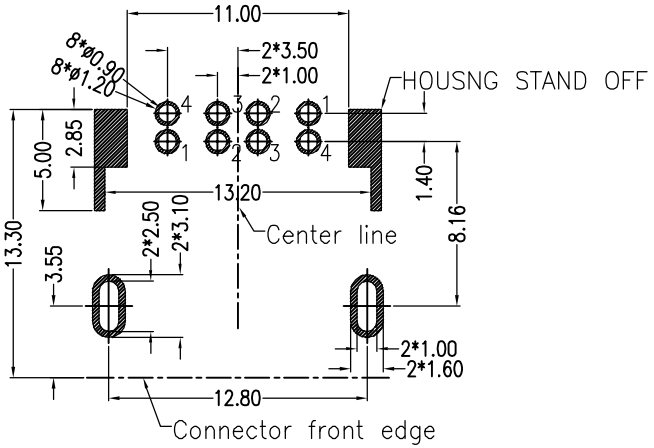

RECOMMENDED P.C.B HOLE LAYOUT
TOP VIEW(TOLERANCE:±0.05)

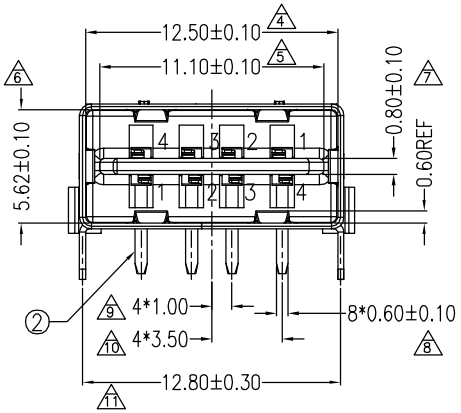

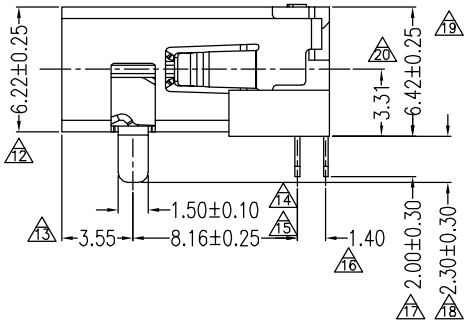

Specification
1. Current Rating:1.5AMP at 250V AC
   Voltage Rating:30V
2. Insulation Resistance:1000MΩ Min
3. Contact Resistance:30MΩ Max
4. Dielectric Withstanding Voltage:500V AC
5. Temperature Range:−20°C to +60°C
6. Mechanical Characteristics:
   Insertion Force:35 Newtons maximum
   Extraction Force:4.9 Newtons minimum

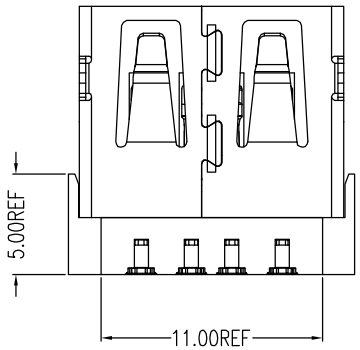

NO.	VARIETY	MATERIAL	QT,Y	REMARK
3	Shell	Copper Alloy	1	T=0.30 Plating nickel
2	Contact	Copper Alloy	4	T=0.25 Plating Gold
1	Housing	LCP	1	UL94V-0 Nature

CZT DONGGUAN ZHENGDE (YIHUA) CONNECTOR CO.,LTD

X. ±0.38	X.° ±4°	UNIT:	mm	DR:		TITLE:	USB AF 2.0 DIP 90° FORWARD AND REVERSE CONN.	
.X ±0.25	.X° ±2°	3RD:		DE:				
.XX±0.20	.XX°							
.XXX±0.10	.XXX°	SCALE:	1:1	CHKD:		SHEET:	1/1	P/N: 10302208A001
CUSTOMER DRAWING		REV:	A-1	APPD:		D/N:	1114-0347	M/N: